Portable Power Station HS800

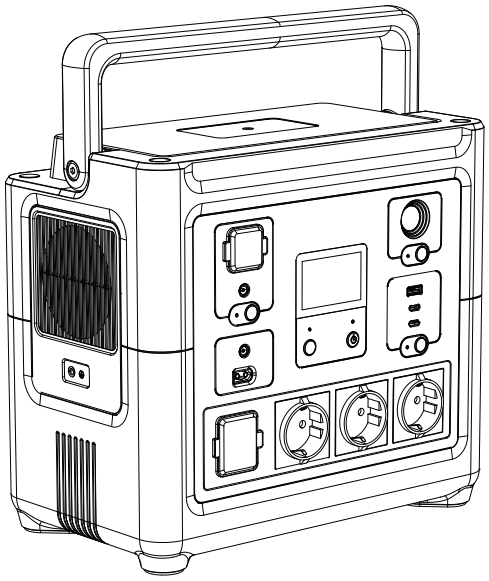

User's Manual

Thank you for purchasing our energy storage series products.
We are striving to create innovative products with extreme safety and excellent performance for you, and we are
Please read the user's manual carefully before using the product to ensure a safe and satisfactory operation.

CAUTION

1. Please keep dry and stay away from fire.
2. Do not disassemble, puncture or squeeze the portable power station.
3. Please recycle and dispose of the product in accordance with local laws and regulations.
4. Please hand it over to a professional recycling company to dispose this portable power station.
5. Children and the disabled please use this product with guardian.

Safety Instructions and Maintenance

1. Please read the manual carefully before using the product.
2. To reduce the risk of injury,please pay more attention when using this product near children.
3. Do not put fingers, palms or any part of your body into the product.
4. Use the unrecommended accessories may cause fire, electric shock or personal injury.
5. Do not use damaged or modified battery packs or devices.
6. Do not operate the portable power station with a damaged cord, plug or output cable.Otherwise it may cause a short circuit and risk of fire.
7. Please hand the power station to a qualified service provider for repair or maintenance.Do not disassemble the portable power station by yourself,as wrong disassembly method may cause the risk of fire or electric shock.
8. In order to reduce the risk of electric shock when the product fails, disconnects the portable power station from the power supply before performing any instructive maintenance operations.
9. Please charge the product in a well-ventilated place, do not obstruct the air circulation.
10. Under some extremely harsh conditions, liquid may be ejected from the battery. Avoid contact with batteries and liquids.If contacted please rinse with plenty of water.If the liquid comes into contact with the eyes, please seek other medical help.
11. Please do not expose the product to fire or excessive heat.
12. Only repairs by qualified service personnel.
13. Please do not exceed the specified input AC voltage. Otherwise it may cause product failure,we will not be responsible for providing free maintenance services. Please keep the safety instructions properly.

Introduction

1. Faster Charging from the Wall
   HS800 offers multiple recharging options. Industry-leading 200W High Power AC input lets you recharge in as little as 2 hours. or to recharge by car or solar panel up to 90W.Charge the HS800 from the sun with our portable solar panels while away from the grid, and keep it topped off from a wall outlet when you're home. Integrated MPPT charge controller ensures you're getting the most efficient solar charge possible.
2. HS800 is a gas-free solar powered generator with versatile port options,and it support to power a wide range of devices with different port options including fast-charging 100W USB-C Power Delivery, multiple fast quick charging USB-A ports, regulated 13.6V, and AC ports.

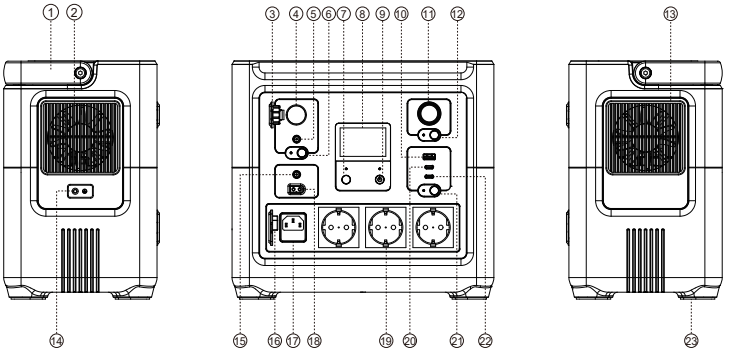

① Handle
② Cooling Hole
③ Dust Cover
④ Car Cigarette Lighter Socket
⑤ DC Output port
⑥ DC ON/OFF Switch
⑦ AC ON/OFF Switch
⑧ LCD Display
⑨ Main Power Button
⑩ QC3.0 USB-A Output Port
⑪ Led Torch
⑫ Led Torch ON/OFF Switch
⑬ Cooling Hole
⑭ Ground Connection
⑮ DC Input port
⑯ Dust Cover
⑰ AC Input port
⑱ Solar Panel Input Port
⑲ AC Output Port
⑳ PD30W USB-C Output Port
㉑ USB ON/OFF Switch
㉒ PD100W USB-C Output Port
㉓ Silicone foot pad

Specification

Capacity:		835.2Wh(19.2V/43.5Ah)			
Battery Type:		LiFePO$_4$ battery cell			
Input:	AC	400W Max.	100-120V~,60Hz		Option
		600W Max.	220-240V~,50Hz		
	XT60	12-28V/5A Max.(150W Max.) Built-in MPPT Solar Charge Controller			
	DC 5521	12-28V/5A Max.(150W Max.)			
Inverter Waveform:		Pure Sine Wave			
Led Torch		3W	SOS/Strobe/Light		
AC Output:		Rated Power: 1000W Peak Power: 1500W	100-120V~,60Hz 220-240V~,50Hz	US/JP/AU EU/UN/CN/UK has 3 ports.	Option
DC Output:	2x USB-C PD	PD 30W (5V/9V/3A; 12V/2.5A)			
		PD 100W (5V/9V/12V/15V/3A; 20V/5A)			
	USB-A	QC3.0 (5V/3A, 9V/2A,12V/1.5A) per port Max.18W			
	Car Socket	13.6V/8A, 108.8W Max.		Total Share 8A Max.	
	DC5525	13.6V/8A, 108.8W Max.			

LCD Display

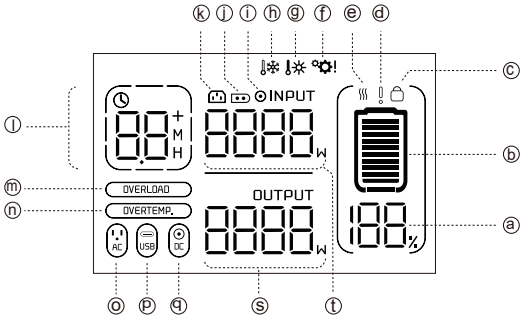

Battery Information indication	ⓐ	188%	Battery Power Level %	ⓓ	!	Battery failure/Low voltage indicate
	ⓑ		Battery Power Level	ⓔ		Battery high/low temperature indication
	ⓒ		Battery lock protection			
Input indication	ⓚ		AC Input	ⓘ		DC Input
	ⓙ		Solar Input	ⓣ	INPUT 8888 W	Input power
Output indication	ⓞ	AC	AC Output Icon	ⓠ	DC	DC/ Car Outlet Output
	ⓟ	USB	USB Output Icon	ⓢ	OUTPUT 8888 W	Output power
Remaining time indication	ⓛ	88 M H	Remaining discharge / charge time	ⓛ	M	Minutes
				ⓛ	H	Hours
Protection indication	ⓕ		System failure indication	ⓜ	OVERLOAD	Overload protection indication
	ⓖ		Over temperature indication	ⓝ	OVERTEMP.	Over temperature protection indication
	ⓗ		Low temperature indication			

How to use the AC output function

Under the condition that the total power does not exceed 300W, all ac outlets can work togehter at the same time.

1. Long press the main power button 3S to turn on. The main power indicator and the screen lights up, enters the standby state.
2. Plug in AC appliances.
3. Tap the AC on/off switch to turn on the AC output function. The product starts to supply power to external AC appliances.
4. Long press the AC power on/off switch to turn off the AC output.
5. When not using the product for a long time，please long press the main power switch for 3S to turn off to save power.

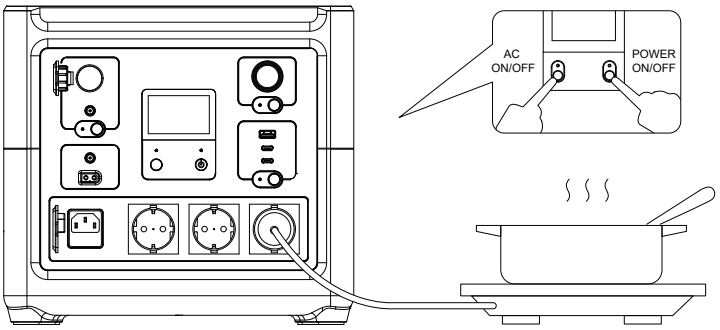

How to use USB output

1. Long press the main power button to turn on.The main power indicator and the screen lights up, enters the standby status.
2. Click the USB on/off switch to turn on the USB function.
3. Plug in the USB devices and start to use.

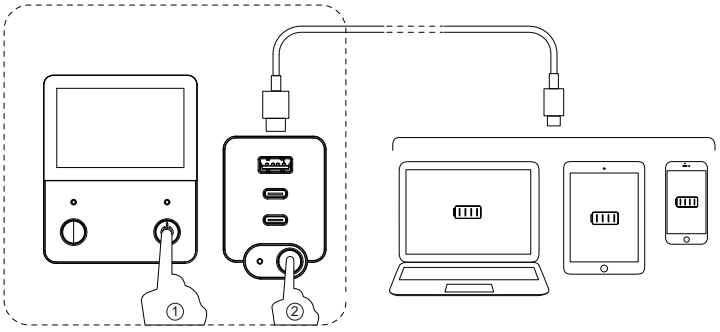

How to use UPS function

1. Plug in the AC input to power the Portable Power Station. The product automatically turns on and enters the charging mode.
2. Plug in the AC devices.
3. Click the AC on/off switch to turn on the AC output function. The AC output enter into the UPS mode.
4. When the external AC power is cut off, Portable Power Station continues to provide AC power to power devices.

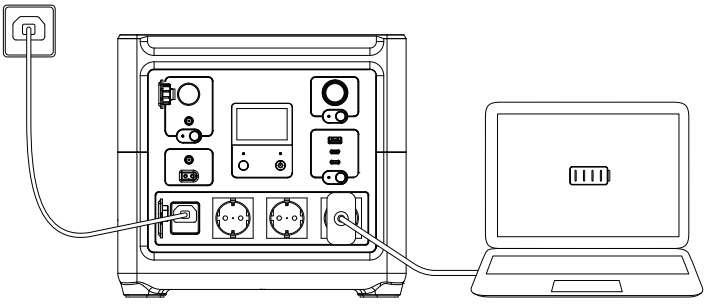

ATTENTION:

- **Ensure that the AC input terminal is connected to the ground wire stably and normally.**
- **Ensure to use the backup UPS function normally,the power of AC electrical appliances must be less than input power. If it is more than input power, for safety considering Portable Power Station automatically disconnects the external AC input and uses its own battery to provide AC power.**
- **When the battery power shows 0%,the UPS function will works normally if the output power equal or less than the input power.But when input power less than the output power, HS800 will shut down automatically.**

How to use DC output

1. Long press the main power button to turn on.The main power indicator and the screen lights up, enters the standby state.
2. Plug in the DC device.
3. Click the DC on/off switch to turn on the DC function.
4. After use, click the DC on/off switch to turn off the DC output.
5. When not using the product for a long time, please long press the main power switch for 3S to turn off to save power.

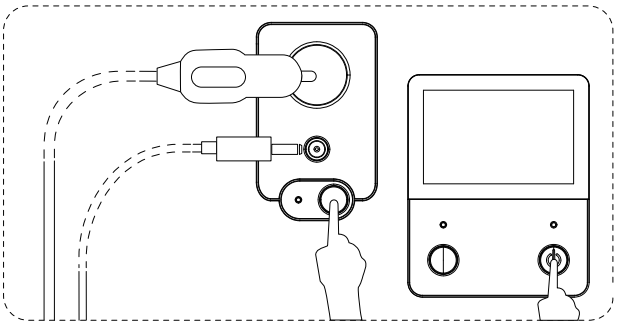

How to charge

- Please charge the HS800 before using.
- Please fully charge the battery before long storage.Please check the HS800 remaining power level every 3 months and full recharge it again.
- There have 3 input ports on the Portable Power Station: 1* AC Input Port, 1* solar panel input port and 1* DC5521 port.

1. AC Input： AC power supply can be used to charge Portable Power Station with a maximum power of 200W through the AC charging port.
2. Solar charging.
3. Car charging.

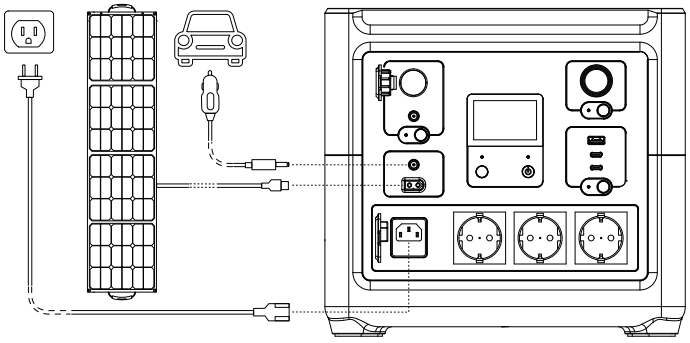

Solar Panel series/parallel charging

Portable Power Station support Solar Panel charging Max 90W.
You can purchase solar panels and dedicated cable accessories that match the Portable Power Station to achieve a high-power solar fast charging experience.

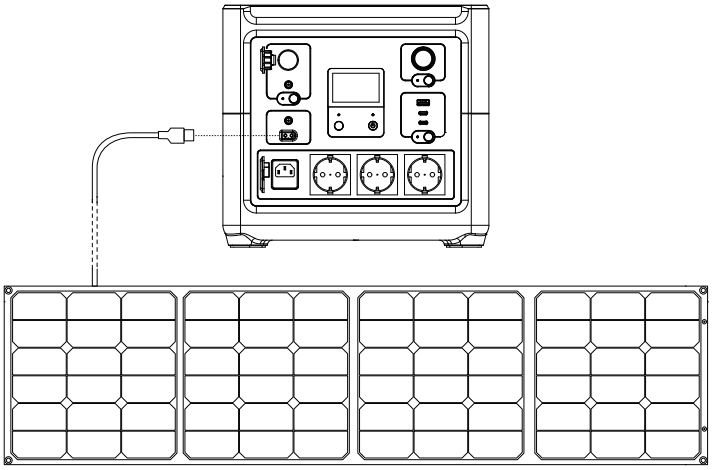

CAUTION:

- **The maximum voltage of solar panels that Portable Power Station can support is 28V,and the maximum current is 5A.**
- **It must be charged by solar panels with a voltage lower than 28V.**
- **The input voltage exceeding 28V has the risk of damaging the product.**